AD-4212D-S

Production Weighing Unit

Simplified Instruction Manual

AD-4212D-33S
AD-4212D-32S
AD-4212D-302S
AD-4212D-301S

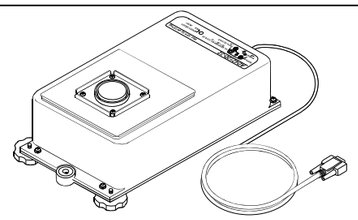

Refer to the instruction manual on the A&D home page.
URL: https://www.aandd.jp/

Caution

(1) No part of this publication may be reproduced, transmitted, transcribed, or translated into any language in any form by any means without the written permission of A&D.
(2) This manual is subject to change without notice at any time to improve the product.
(3) The contents of this manual and the specifications of the instrument covered by this manual are subject to change for improvement without notice.
(4) A&D bears no responsibility for claims of losses and benefits due to the operation of this device, regardless of the reason.

A&D Company, Ltd.

1WMPD4004691A

1. Introduction

This manual is an outline of and the instructions for the AD-4212D-S series. Refer to the A&D website for more information on how to use, specifications and communications. (https://www.aandd.jp/)

2. Features

- A compact Weighing Unit suitable for use in equipment for production line systems, draft chambers or glove boxes. The weighing unit is compact.
- The calibration using the internal calibration weight can easily be performed.
- A Super Hybrid Sensor is used to provide high resolution.
- Attaching a waterproof cap for cleaning instead of the weighing pan provides IP65 compliant dustproof and drip-proof specifications.
- The AD-4212D series can output the weighing digital data directly. Therefore, the AD-4212D series (the weighing unit) can be connected to a personal computer or a PLC directly.
- The AD-4212D series has a patented shock absorber under the weighing pan and can cope with movement in all directions, protecting the weighing unit from an actuator malfunction.
- When connected to an optional AD-8922A or AD-8923-BCD/CC, the weighing data can be received and re-zero and calibration can be done manually.
- In addition to standard RS-232C communication, BCD output, comparator output, analog output, RS-485 communication, CC-Link, and Modbus RTU are enabled by using various accessories.

3. Cautions

Before use, pay attention to the following items to fully demonstrate the performance of the balance.

- This device is a precision instrument. Please handle with care.
- Use in an environment with as little dust and shock as possible.
- Do not install the main body (weighing unit) near the air conditioner.
- Install in a place out of direct sunlight.
- Connect the power to the balance using the AC adapter at least one hour before use, but for the AD-4212D-33/32, four hours are required. It is recommended to connecting the power to the balance.
- Calibrate the balance before first use or after having moved it to another location to enable correct weighing. In addition, calibrate it periodically to maintain accuracy.

4. Balance Unpacking, Installation, and Cautions

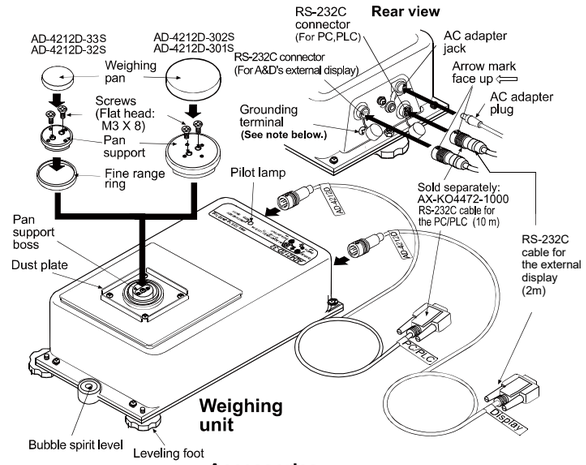

Accessories

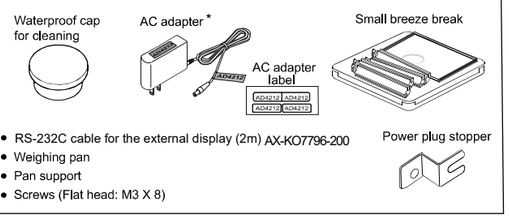

* Please confirm that the AC adapter type is correct for your local voltage and receptacle type.

☐Attachment to the base

When attaching the AD-4212D series to a base, remove the three leveling feet and use the screw holes to secure the weighing unit to the base.

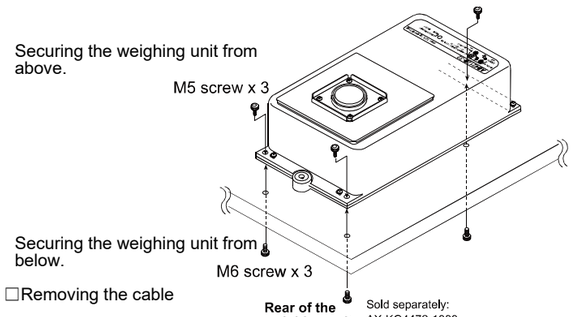

☐Removing the cable

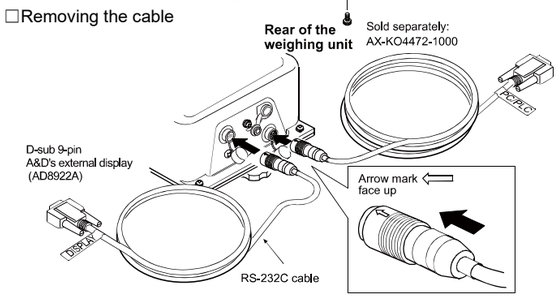

How to disconnect the cable from the weighing unit

Slide the connector sleeve in the direction of the arrow to unlock and gently pull the connector out.

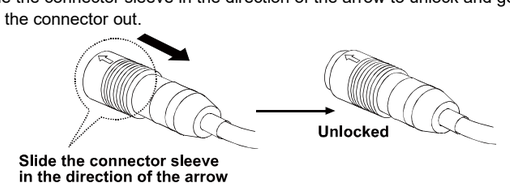

☐Assembling the small breeze break

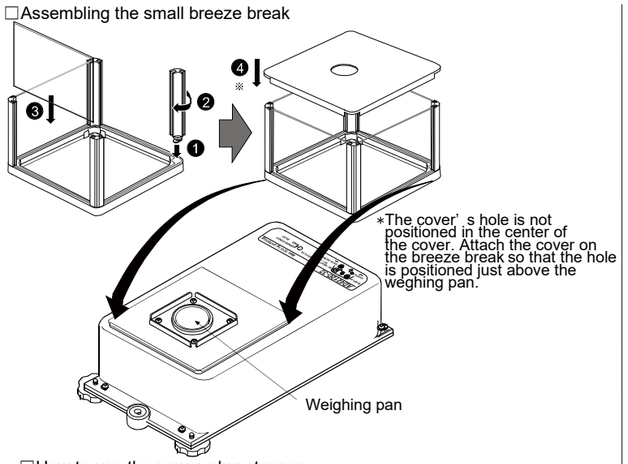

☐How to use the power plug stopper

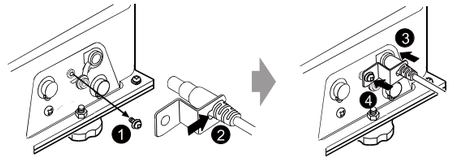

5. Specifications

	AD-4212D-33S	AD-4212D-32S	AD-4212D-302S	AD-4212D-301S
Weighing capacity	32g	32g/5.1g	320g	320g
Readability	0.001mg	0.01mg /0.001mg	0.01mg	0.1mg
Repeatability	0.002mg	0.02mg /0.004mg	0.02mg	0.07mg
Display refresh rate	10 times/second			
Power supply (AC adapter)	Input AC100V (+10%, -15%) 50Hz/60Hz			
Power consumption	30VA (Including AC adapter)			
Current consumption	DC12V Approx.0.3A(Excluding adapters and options)			
Weight	Approx. 3.6kg			

☐External Dimensions

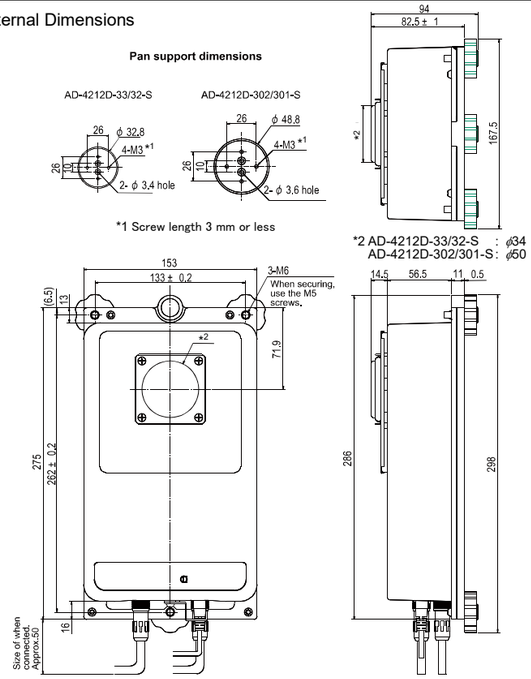

6. Communication

☐Interface

AD-4212D-S has two RS-232C ports (for display / PLC).
The connector shape of the port for the display and the port for the PLC are different. If you want to use them, you need a dedicated cable for each. The cable for PLC (AX-KO4472-1000) is not included. If you want to use it, please purchase it separately.

☐Factory setting

Baud rate	2400bps
Data bits	7 bits
Parity	EVEN
Stop bit	1 bit
Code	ASCII
Data format	A&D standard format

☐Pin assignment

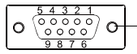

Inch screw #4-40UNC

Pin No.	Signal name	Direction	Description
1	Vs*	-	Internal use Power supply for external devices :GND*
2	TXD	Output	Transmit data
3	RXD	Input	Receive data
4	-	-	N.C.
5	SG	-	Signal ground
6	DSR	Output	Data set ready
7	RTS	Input	Request to send
8	CTS	Output	Clear to send
9	Va*	-	Internal use Power supply for external devices :Output terminal*

*Contents of the port for the external display only. The port for PLC is N.C.

☐Access point and port to use

There are the following differences in communication content between the port for the external display and the port for the PLC.

For external display : Continuous output of weighing data.
Output of special commands for displays (those with "@" at the beginning)
For PLC : Output of weighing data by external command.

The recommended ports depending on the usage are as follows.

Access point		Recommended AD-4212D-S port
PC	WinCT,etc.	For PLC
	WinCT for AD4212D	For external display
PLC		For PLC
AD-8922A		For external display
AD-8923-BCD/CC		For external display
AD-8551R	RS-485	For PLC
	Modbus RTU	For external display
AD-8552EIP	EtherNet/IP	For external display

☐Frequently used commands

The corresponding operation can be performed by sending the following command from the outside.

Command	Action
Q	Immediately request one measurement data
SIR	Immediately request continuous weighing data
C	Release the SIR command
R	Perform re-zeroing
CAL	Perform sensitivity adjustment with built-in weight
U	Change the response speed
RNG	Switch the Readability

☐Example of output weighing data (in A & D standard format)

S	T	,	+	0	0	0	.	1	2	7	8			g	C_R	L_F

ST : Stable
US : Unstable
OL : Over capacity

Weighing value : 9 or 10 chracters

Unit : g or mg

☐Convertible signals

By connecting individual accessories, the output of the AD-4212D-S can be converted to the following signals.

Accessory	Signal conversion destination
AD-8922A	BCD output (Option AD-8922A-01)
	Comparator output (Option AD-8922A-04)
	Analog output (Option AD-8922A-06)
AD-8923-BCD	BCD output
AD-8923-CC	CC-Link
AD-8551R	RS-485 output
	Modbus RTU
AD-8552EIP	EtherNet/IP